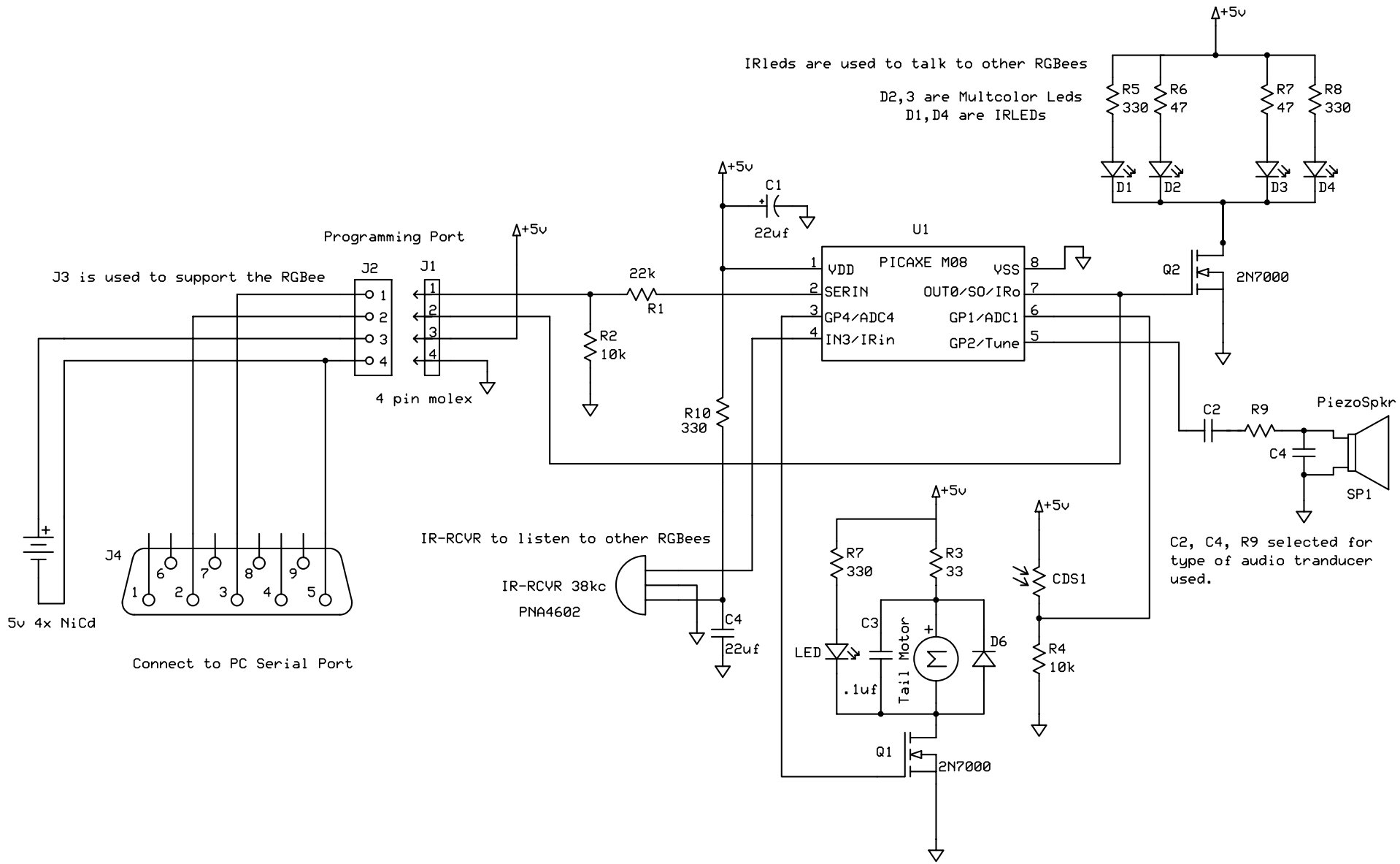

Botronics PIC-PETS		
I-PICBug		
W.D.Sherman	Rev 1.0 6/10/2006	