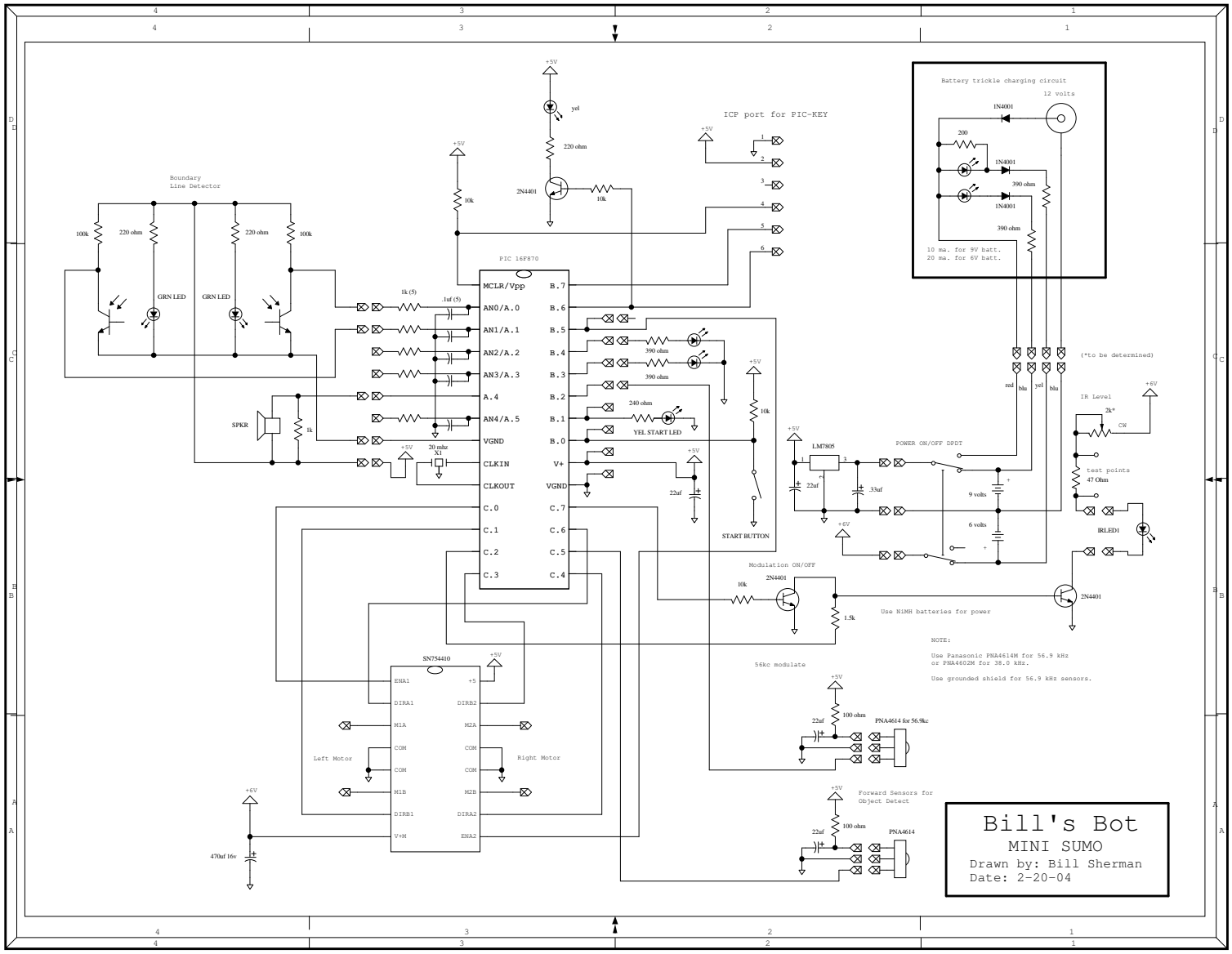
Boundary
Line Detector
100k
220 ohm
GRN LED
GRN LED
220 ohm
100k
SPKR
1k
+5V
10k
1k (5)
.1uf (5)
20 mhz
X1
PIC 16F870
MCLR/Vpp
AN0/A.0
AN1/A.1
AN2/A.2
AN3/A.3
A.4
AN4/A.5
VGND
CLKIN
CLKOUT
C.0
C.1
C.2
C.3
B.7
B.6
B.5
B.4
B.3
B.2
B.1
B.0
V+
VGND
C.7
C.6
C.5
C.4
390 ohm
390 ohm
240 ohm
YEL START LED
22uf
+5V
yel
220 ohm
2N4401
10k
ICP port for PIC-KEY
+5V
1
2
3
4
5
6
START BUTTON
Battery trickle charging circuit
12 volts
1N4001
200
1N4001
390 ohm
1N4001
390 ohm
10 ma. for 9V batt.
20 ma. for 6V batt.
(*to be determined)
red
blk
yel
blu
IR Level
+6V
2k*
CW
test points
47 Ohm
IRLED1
2N4401
+5V
LM7805
22uf
.33uf
POWER ON/OFF DPDT
9 volts
6 volts
+6V
Modulation ON/OFF
2N4401
10k
1.5k
Use NiMH batteries for power
NOTE:
Use Panasonic PNA4614M for 56.9 kHz
or PNA4602M for 38.0 kHz.
Use grounded shield for 56.9 kHz sensors.
56kc modulate
+5V
100 ohm
22uf
PNA4614 for 56.9kc
SN754410
+5V
ENA1
DIRA1
M1A
COM
COM
M1B
DIRB1
V+M
+5
DIRB2
M2A
COM
COM
M2B
DIRA2
ENA2
Left Motor
Right Motor
+6V
470uf 16v
+5V
Forward Sensors for
Object Detect
100 ohm
22uf
PNA4614
Bill's Bot
MINI SUMO
Drawn by: Bill Sherman
Date: 2-20-04