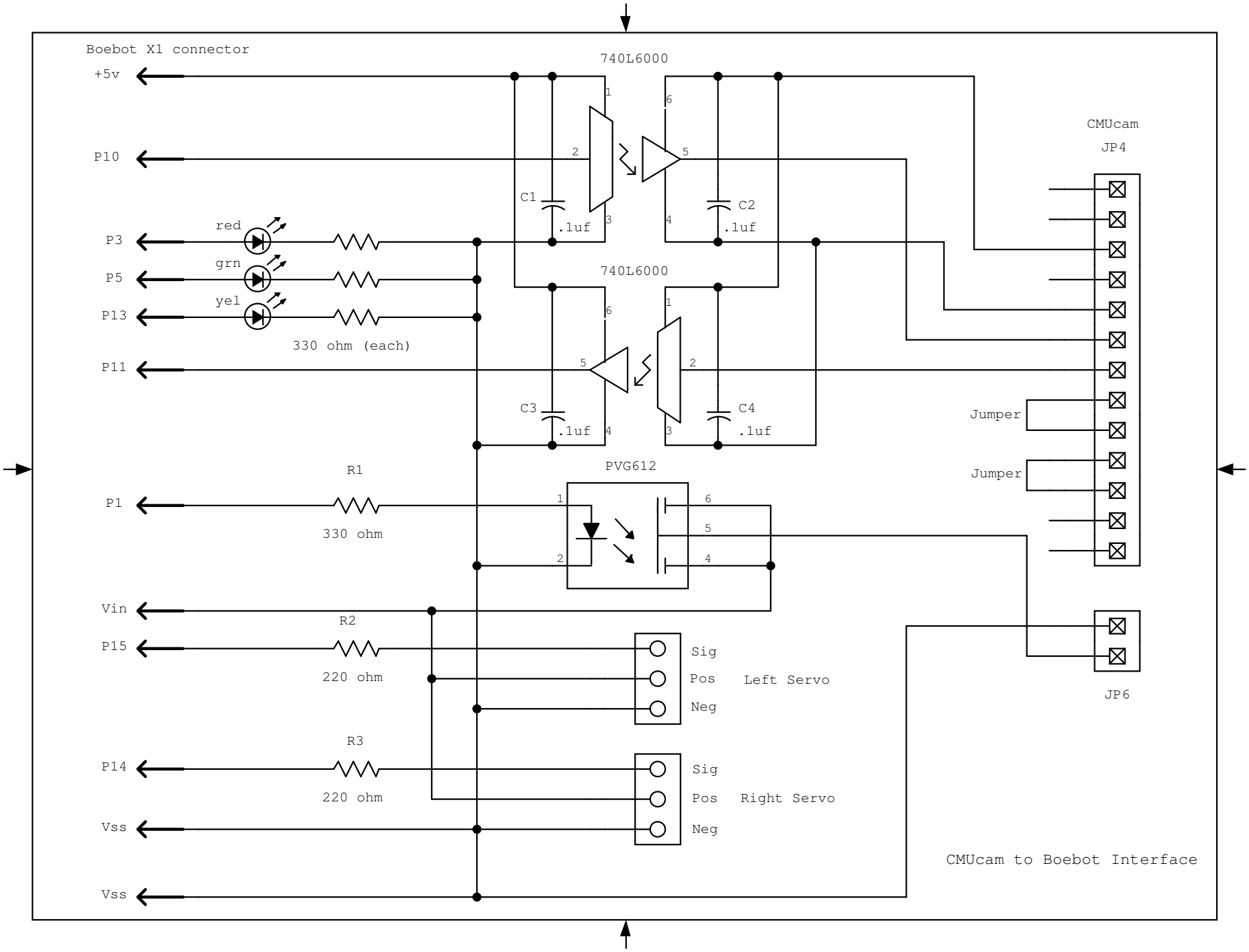
Boebot X1 connector
+5v
P10
P3
P5
P13
P11
P1
Vin
P15
P14
Vss
Vss
red
grn
yel
330 ohm (each)
740L6000
C1
.1uf
C2
.1uf
740L6000
C3
.1uf
C4
.1uf
R1
330 ohm
PVG612
R2
220 ohm
R3
220 ohm
Sig
Pos
Neg
Left Servo
Sig
Pos
Neg
Right Servo
CMUcam
JP4
Jumper
Jumper
JP6
CMUcam to Boebot Interface