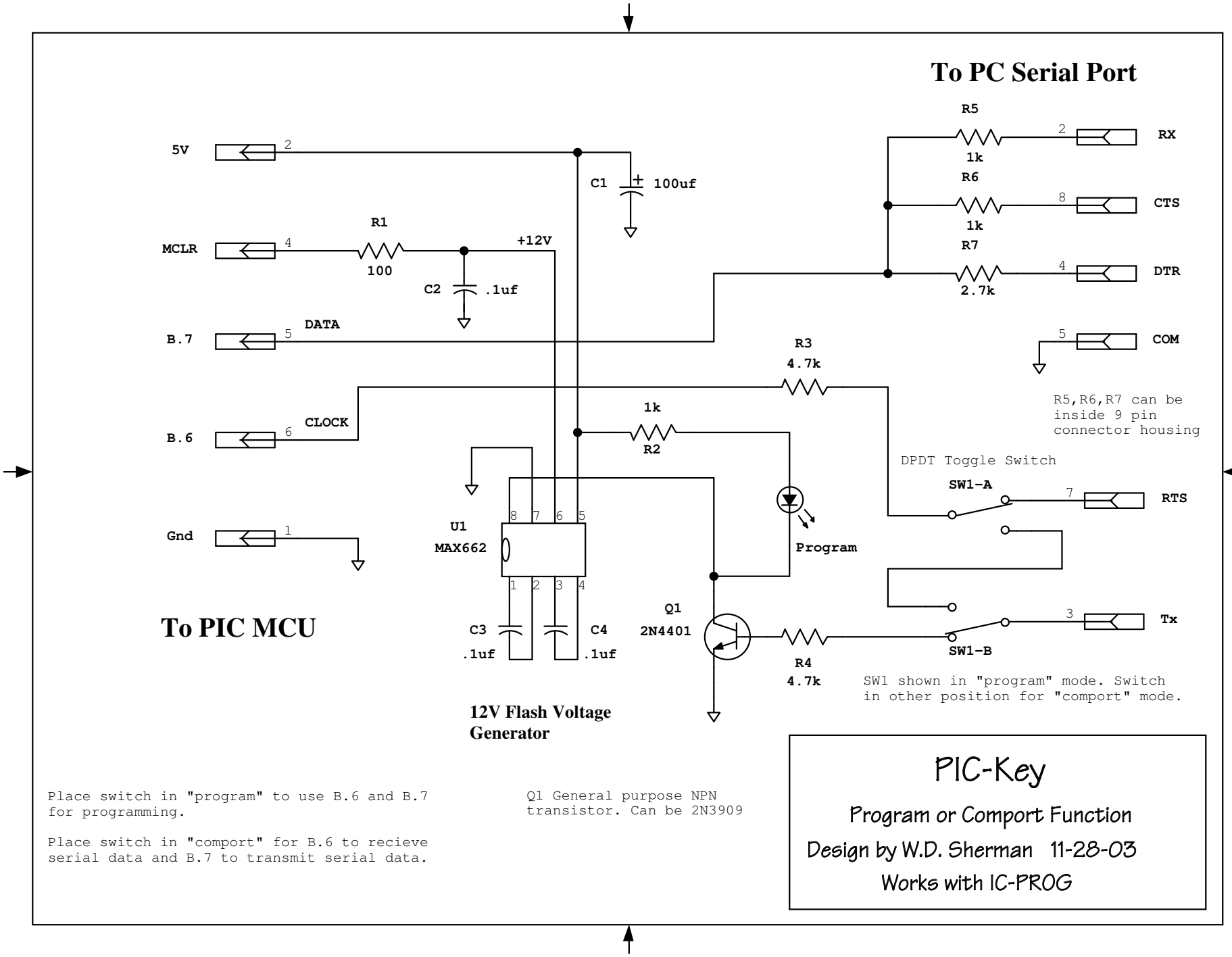
To PC Serial Port
5V
2
C1
100uf
R5
1k
RX
R6
1k
CTS
R7
2.7k
DTR
MCLR
4
R1
100
+12V
C2
.1uf
B.7
5
DATA
COM
R3
4.7k
R5,R6,R7 can be inside 9 pin connector housing
B.6
6
CLOCK
1k
R2
DPDT Toggle Switch
SW1-A
RTS
Gnd
1
U1
MAX662
Program
To PIC MCU
C3
.1uf
C4
.1uf
Q1
2N4401
R4
4.7k
SW1-B
Tx
SW1 shown in "program" mode. Switch in other position for "comport" mode.
12V Flash Voltage Generator
PIC-Key
Program or Comport Function
Design by W.D. Sherman 11-28-03
Works with IC-PROG
Place switch in "program" to use B.6 and B.7 for programming.
Place switch in "comport" for B.6 to recieve serial data and B.7 to transmit serial data.
Q1 General purpose NPN transistor. Can be 2N3909