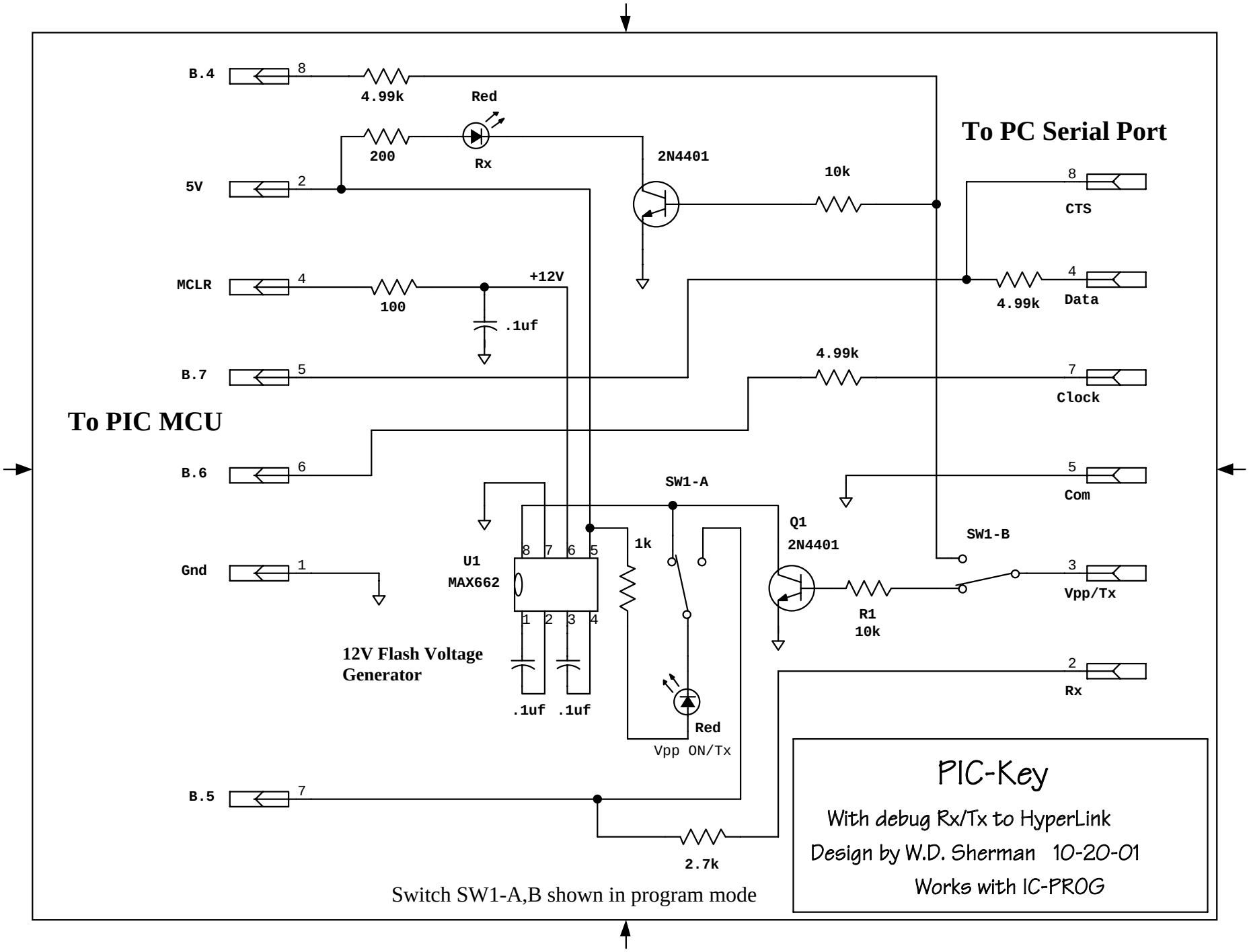

Switch SW1-A,B shown in program mode